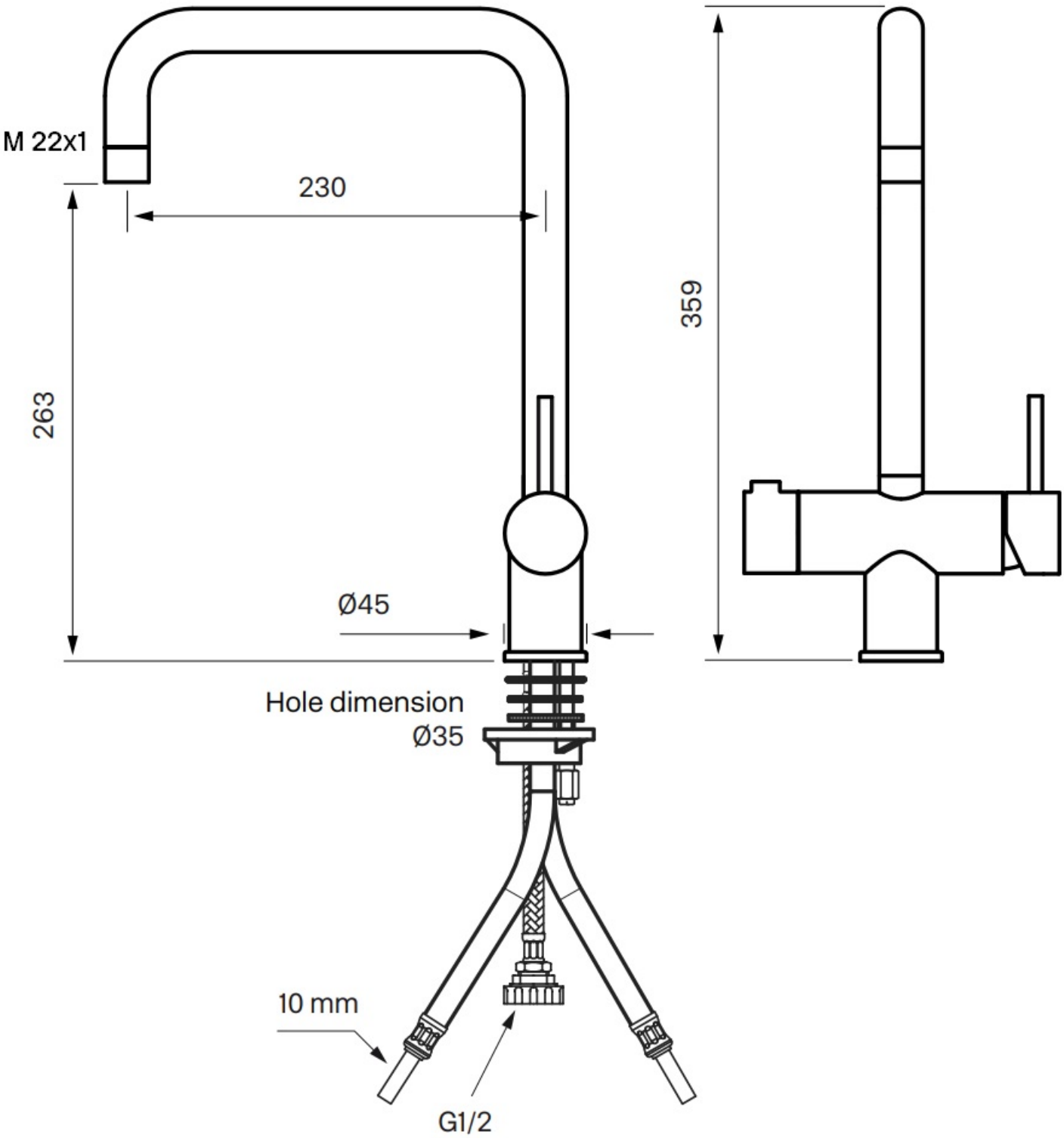
M 22x1
230
263
359
Ø45
Hole dimension
Ø35
10 mm
G1/2