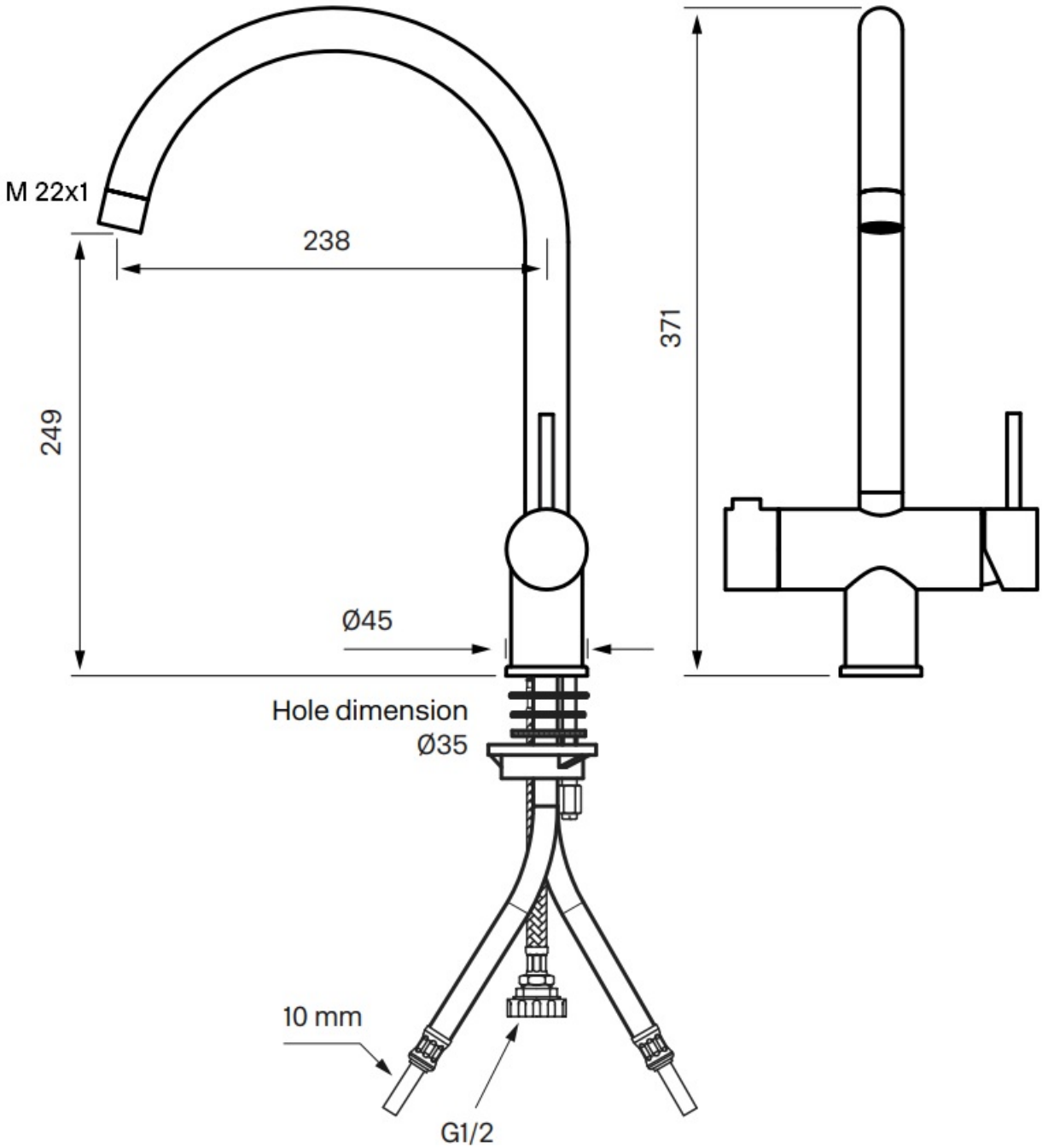
M 22x1
238
249
371
Ø45
Hole dimension
Ø35
10 mm
G1/2